Date: Wednesday, 7/19/2006 10:04:32 AM
User: Eric Charbonneau

Process Sheet

Customer	: CC-DAR01	Drawing Name	: SKIDTUBE EC135 PROTOTYPE
Job Number	: 022A		
Estimate Number	: 10068		
P.O. Number	: N/A	Part Number	: INITIAL PROTOTYPE D3510-041
This Issue	: 7/19/2006 S.O. No. : N/A	Drawing Number	: P601-637
Prsht Rev.	: NC	Project Number	: P601-637
First Issue	: 5/9/2006 Type : R & D LANDING GEAR	Drawing Revision	: N/A
Previous Run	: 020A	Material	: N/A
Written By	:	Due Date	: 2/1/2006 Qty: 1 Um: Each
Checked & Approved By	:		
Comment	: Project #: Description:		

Additional Product

Job Number:

Seq. #:	Machine Or Operation:	Description :
1.0	MFG ENGINEERING	MFG ENGINEERING

Comment: Setup: 0.00Hrs/ Run: 0.0000Hrs Total Run : 0.0000Hrs
MFG ENGINEERING
Manufacture Prototype as per Dwg's Supplied By Engineering
Comments:
- Turn as per Dwg D3510
- Mat'l ~~[illegible]~~ M6061T6T3500W0375 Batch: 1014448 Qty: 3
Lathe - Inspect Level 2 BG 06.07.27 3
mill - mill as per Dwg JM 06.08.11
QC2 - Inspect JM 06.08.11
QC8 - Second Check EL 06.08.28 (NOT A JOINT)
Weld - Weld as per Eng - Fill Hole for Re-Drill
- A/R AL. ROD Batch: M100660 BE 06-08-15
GA - Transfer Drill Wear Plate Holes JM 06.08.16
Fin. - Chemical Conversion as per Dart QSI 005 4.1 06-08-18
QC3 - Inspect CCC. EL 06.08.24 RH 06.08.18
- PTO

Seq. #:	Machine Or Operation:	Description :
2.0	PG	PURCHASING

Comment: Setup: 0.00Hrs/ Run: 0.0000Hrs Total Run : 0.0000Hrs
PURCHASING
Attached certificate of conformity for raw material and subcomponents use for this w/o

Form: rprocess

Pick:

Qty	Part #	Desc	Batch:
2	NAS1330C4KB271	INSERT	M101325
6	NAS133C3KB316	INSERT	M17905
2	NAS1330C3KB216	INSERT	MW7905

06-08-18

Finishing Install Inserts as per Dwg D3510

QC5 Inspect Work To Current Step. 06.08.18

ST Identify & Stock.

Place into eng's lab 06.08.18

Process Sheet

ustomer: CC-DAR01 **Drawing Name:** SKIDTUBE EC135 PROTOTYPE

ob Number: 022A **Part Number:** INITIAL PROTOTYPE

Job Number:

Seq. #:	Machine Or Operation:	Description :
3.0	PACKAGING 1	PACKAGING RESOURCE #1

Comment: Setup: 0.00Hrs/ Run: 0.0000Min Total Run : 0.0000Hrs
PACKAGING RESOURCE #1
Identify "FOR ENGINEERING USE ONLY" and distribute to engineering. ~~EA~~ 06-08-15

4.0	ENGINEERING 1	ENGINEERING RESOURCE #1

Comment: Setup: 0.00Hrs/ Run: 0.0000Min Total Run : 0.0000Hrs
ENGINEERING RESOURCE #1
Approval of project manager_____

5.0	DC	DOCUMENT CONTROL

Comment: Setup: 0.00Hrs/ Run: 0.0000Hrs Total Run : 0.0000Hrs
DOCUMENT CONTROL
Inspection Level 21 MA 06.08.25

6.0	MFG ENGINEERING	MFG ENGINEERING

Comment: Setup: 0.00Hrs/ Run: 0.0000Hrs Total Run : 0.0000Hrs N/A
MFG ENGINEERING
Manufacture Prototype as per Dwg's Supplied By Engineering 06-08-15
Comments:

06.08.15

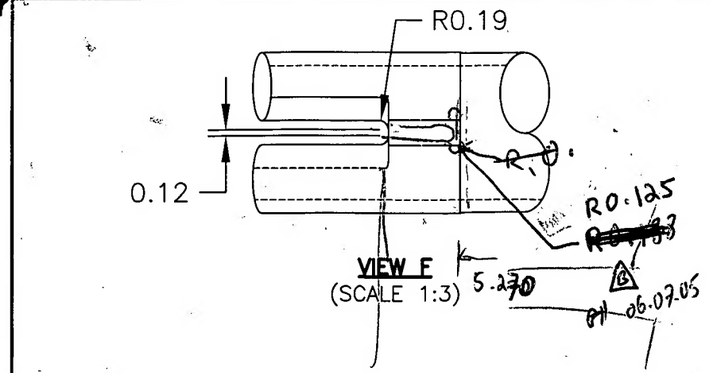

VIEW F
(SCALE 1:3)

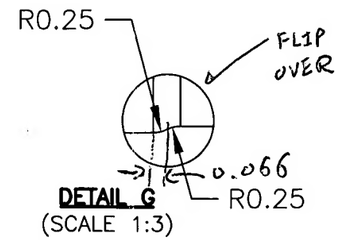

DETAIL G
(SCALE 1:3)

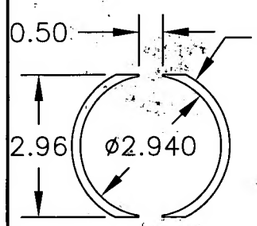

SECTION J–J
(SCALE 1:3)

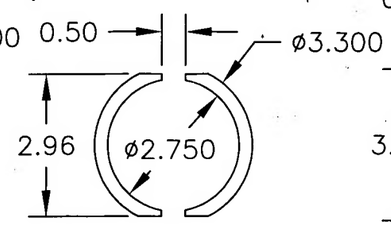

SECTION A–A
(SCALE 1:3)

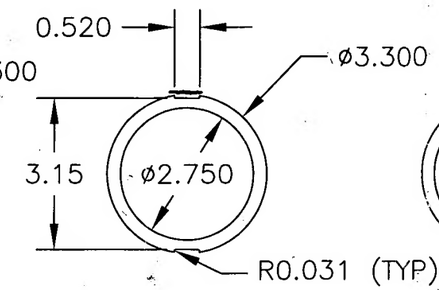

SECTION B–B
(SCALE 1:3)

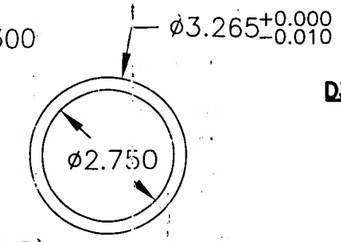

SECTION C–C
(SCALE 1:3)

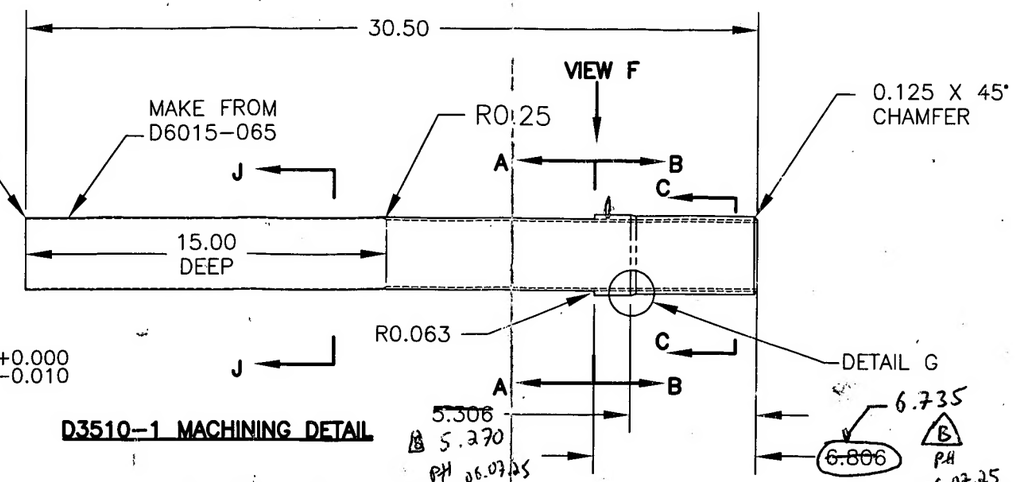

D3510–1 MACHINING DETAIL

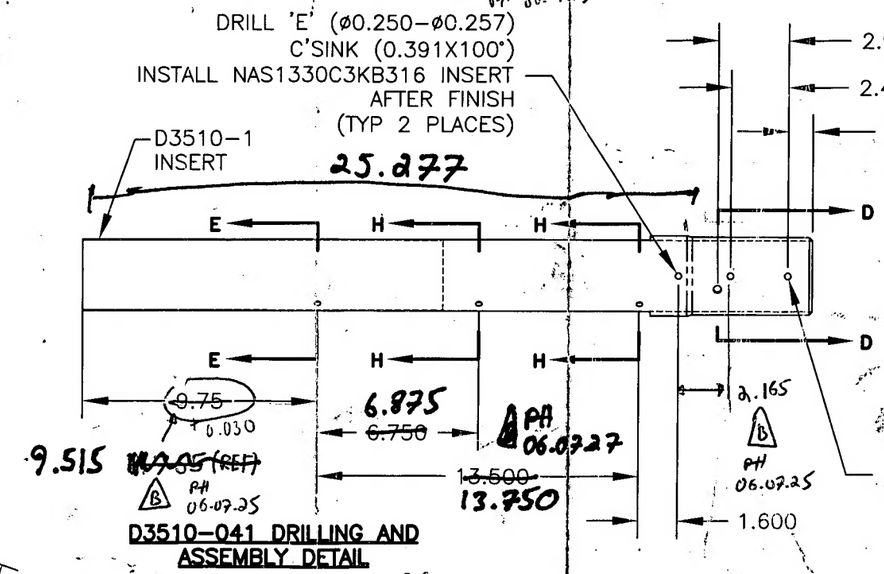

D3510–041 DRILLING AND ASSEMBLY DETAIL

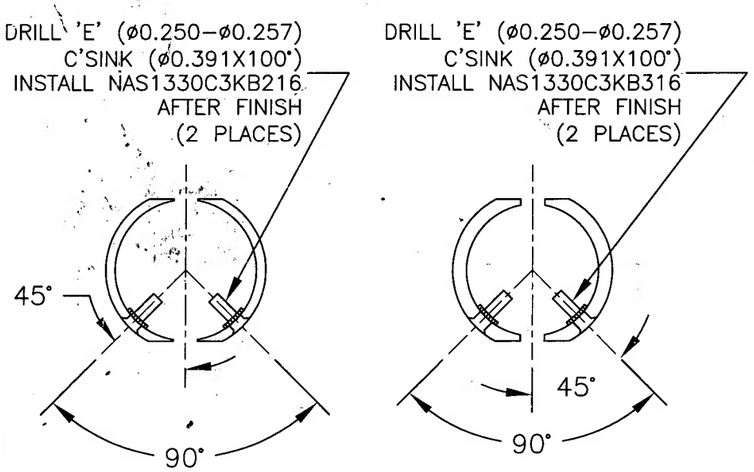

SECTION E–E
(SCALE 1:3)

SECTION H–H
(SCALE 1:3)

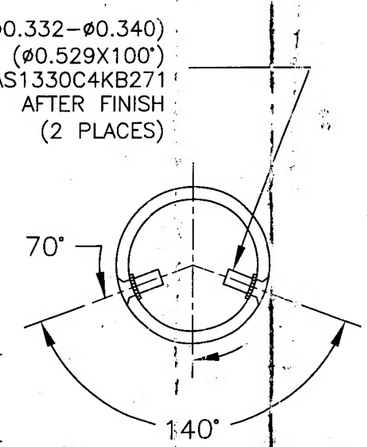

SECTION D–D
(SCALE 1:3)

3/16

PARTS LIST

QTY – 041	PART NUMBER	DESCRIPTION
X	D3510-041	SKIDTUBE INSERT ASSEMBLY
1	D6015-065	EXTRUSION
2	NAS1330C3KB216	INSERT
6	NAS1330C3KB316	INSERT
2	NAS1330C4KB271	INSERT

D3510–041 INSERT ASSEMBLY

1) MATERIAL: MAKE FROM D6015–065 EXTRUSION
2) FINISH: CHEMICAL CONVERSION COAT PER DART QSI 005 4.1
3) ALL DIMENSIONS ARE IN INCHES
4) TOLERANCES ARE PER DART QSI 018 UNLESS OTHERWISE NOTED
5) BREAK ALL UNMARKED SHARP EDGES 0.005 TO 0.015

PROTOTYPE
PLEASE RETURN ALL ISSUED DATA TO ENGINEERING
06.06.10 PH

A	06.04.21	NEW ISSUE

DESIGN	DRAWN BY	DART AEROSPACE USA, INC. PORT HADLOCK, WA	
CHECKED	APPROVED	DRAWING NO. D3510	REV. A SHEET 1 OF 1
DATE 06.04.21		TITLE SKIDTUBE INSERT	SCALE 1:8

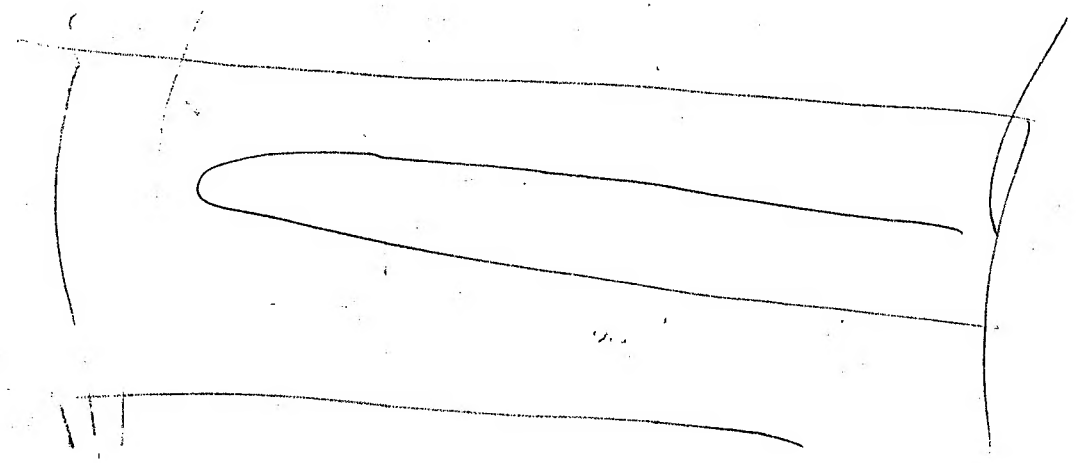

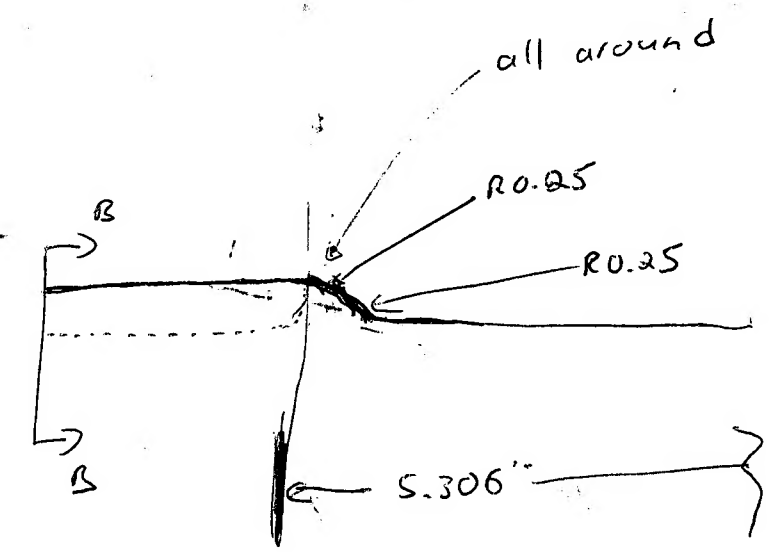

DETAIL G

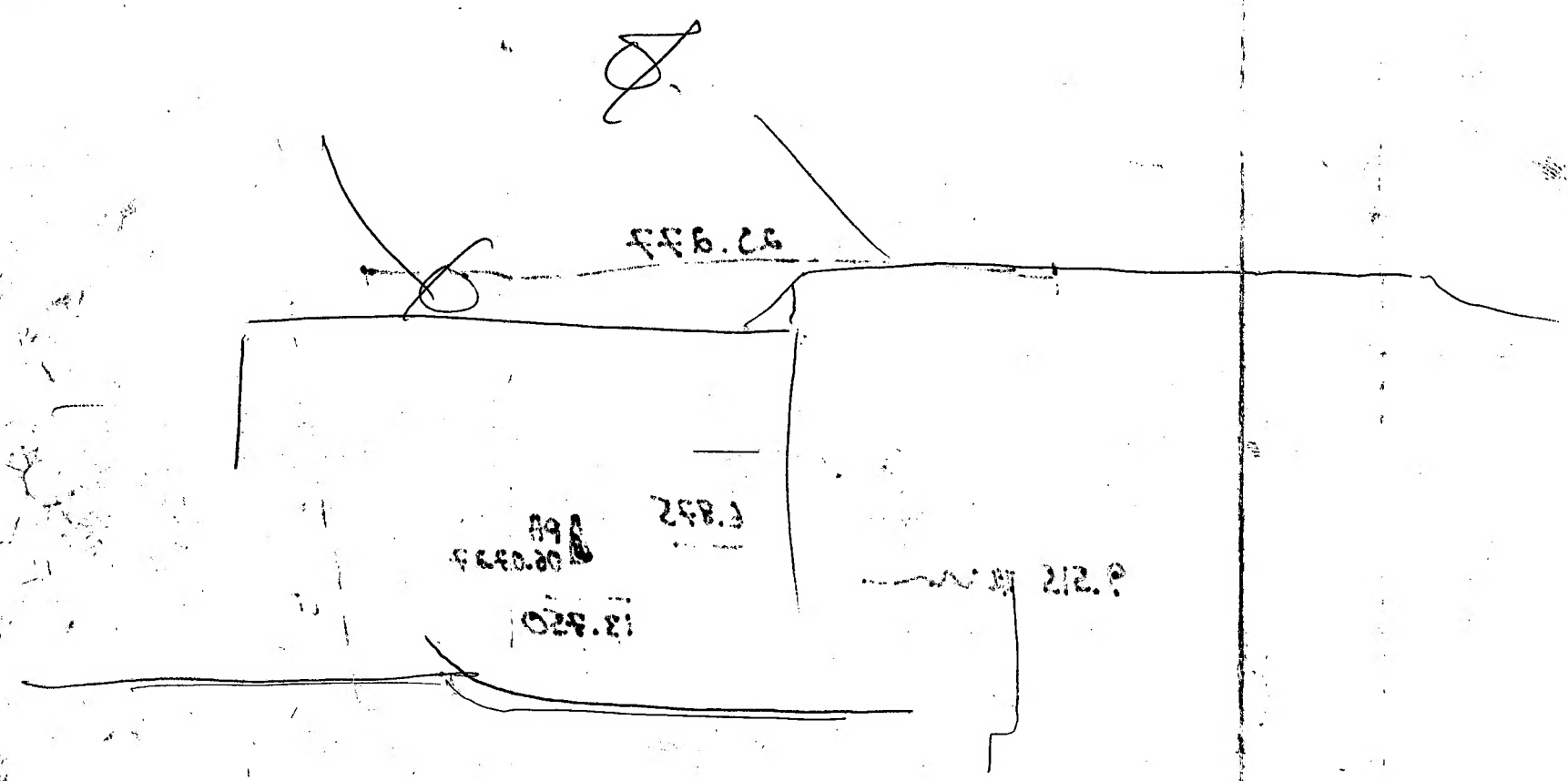

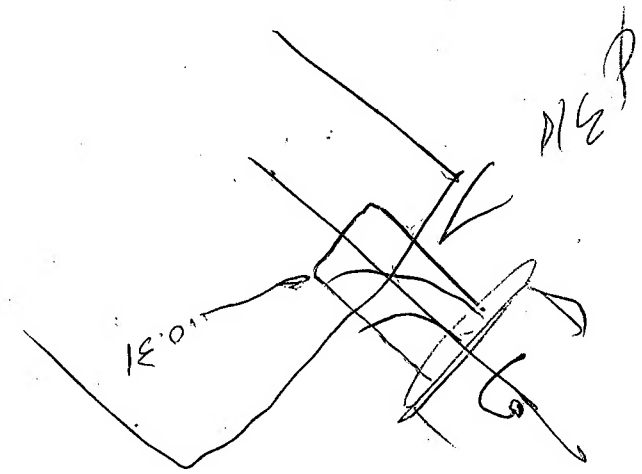

DART AEROSPACE LTD	Work Order:	
Description: Shudtube insert	Part Number:	D3510-1
Inspection Dwg: D3510 , Rev: A		Page 1 of 1

FIRST ARTICLE INSPECTION CHECKLIST Page 1 of 2

[X] First Article [X] Prototype

Drawing Dimension	Tolerance	Actual Dimension	Accept	Reject	Method of Inspection	Comments
~~.50~~	~~±.03~~					
~~2.300~~	~~±.010~~					
2.940	"	2.940	✓			
~~2.96~~	~~±.03~~					
~~.50~~	~~"~~					
~~.520~~	~~±.010~~					
~~R.031~~	~~±.010~~					
3.265	+.000 -.010	3.263	✓			
~~R.19~~	~~±.03~~					
~~.12~~	~~"~~					
R.25	"	R.25	✓			
.066	±.010	.066	✓			
.063 x 45°	±.010	.063	✓			
30.50	±.03	30.50	✓			
15.00	"	15.00	✓			
~~R.25~~	~~"~~					
R.063	±.010		✓			
.125 x 45°	"	.125	✓			
5.270	"	5.270	✓			
~~6.735~~	~~"~~					
25.277	"	25.277	✓			
~~2.981~~	~~"~~					
~~2.434~~	~~"~~					

Measured by:	BG.1
Date:	06.08.27

Audited by:	[illegible]
Date:	06.08.26

Prototype Approval:	[illegible]
Date:	06.06.26

Rev	Date	Change	Revised by	Approved
A		New Issue	KJ/JLM	

DART AEROSPACE LTD	Work Order:	
Description:	Part Number:	D3510-1
Inspection Dwg: , Rev:		Page 1 of 1

FIRST ARTICLE INSPECTION CHECKLIST

[X] First Article [X] Prototype

Drawing Dimension	Tolerance	Actual Dimension	Accept	Reject	Method of Inspection	Comments
.50	+/-.030	.485	✓			
2.96	+/-.030	2.978	✓			
3.150	+/-.030	3.157	✓			
.520	+/-.010	.517	✓			
Ø.250	.250-.287	Ø.251	✓			
Ø.332	.332-.340	Ø.333	✓			
Ø.266	+.006 -.001	Ø.268	✓			
			✓			
6.875	+/-.010	6.875	✓			
1.036	+/-.010	1.034	✓			
2.434	+/-.010	2.429	✓			
9.515	+/-.0	9.515	✓			

Measured by:	[signature]
Date:	06-08-12

Audited by:	[signature]
Date:	06-08-12

Prototype Approval:	PH
Date:	06-08-12

Rev	Date	Change	Revised by	Approved
A		New Issue	KJ/JLM	

ABH- 3.500- .375- 2.750-E6061 * 101148094 * 0004997 * BN9722 * 5/5/2006

M101448

05/02/2006 From: MARMON/KEYSTONE To:
M/K OR: INIT. OR.REF:
C.P.O.: BN9722 SLSPRS:
C PART:

KAISER ALUMINUM
MATERIAL CERTIFICATION

KAISER ALUMINUM
ENGINEERED PRODUCTS
9700 SOUTH HARLEM AVE
BRIDGEVIEW IL 60455

MARMON-KEYSTONE CORP
10700 MARMON DR
BOLINGBROOK, IL 60440-3060

PAGE 1

MARMON-KEYSTONE CORP
BOLINGBROOK IL 60440
SOLD TO

60-23640
PURCHASE ORDER

04/12/06
DATE PRINTED

HB3.500X0.375X24FT
CUSTOMER PART NUMBER

3.500 +/-.015 IND +/-.015 MEAN O.D.
X .375 WALL SMLS HOLOBAR
DESCRIPTION

983171-003
RELEASE-ITEM

101148094
LOT

6061-T6511
ALLOY/TEMPER

==========

MECHANICAL PROPERTY RESULTS

REFERENCE	SAMPLE#	UTS(KSI)	YTS(KSI)	%Elong in 2"	HARDNESS	CONDUCT.	BEND
KTR044478	0001 01	47.6	42.5	18.4		N/A	N/A

CHEMICAL COMPOSITION (WT%), ALUMINUM REMAINDER

6061 LIMITS	Si	Fe	Cu	Mn	Mg	Cr	Zn	Ti	Pb	Bi	Zr	Others Ea	Others Tot
Maximum	0.8	0.7	0.40	0.15	1.2	0.35	0.25	0.15	NA	NA	NA	0.05	0.15
Minimum	0.40		0.15		0.8	0.04			NA	NA	NA		

==========

APPLICABLE REQUIREMENTS:

ASTM-B241-02-STENCILED
ASTM-B221-02
ASME-SB241 1998 SECT II
AMS-QQ-A-200/8 TYPE 1
ASTM-B345-02
UNS#96061

Kaiser Aluminum & Chemical Corp. ('Kaiser') hereby certifies that metal shipped under this order has been inspected and tested and found in conformance with the applicable specifications forming a part of the description set forth in Kaiser's sales acknowledgement form. Any warranty is limited to that shown on Kaiser's general terms & conditions of sale. Test reports are on file, subject to examination.

Q. C. REVIEWED

Frank E. Watson
Quality Assurance Manager

AT 3.5.375 733